NC STATE UNIVERSITY

JTATM

JOURNAL OF TEXTILE AND APPAREL, TECHNOLOGY AND MANAGEMENT

Volume 1, Issue 1, September 2000

RAPID PROTOTYPING IN THE TEXTILE & APPAREL INDUSTRY: A PILOT PROJECT

Cynthia L. Istook
North Carolina State University

ABSTRACT

Technological advances during the past decade have opened many new doors for the Textile and Apparel industries, especially in the area of rapid prototyping and related activities. We need to have a better understanding of how some of this technology may benefit the textiles industry, how these developing systems can be most successfully implemented, and how we can use these systems to the greatest advantage to serve our customers, today and in the future. A project was developed to explore integration of 3-D body scanning, CAD/CAM, and digital printing technologies to support prototpying and mass customization activities. Patterns altered to fit each specific customer were cut from their digitally printed designs, sewn into the desired garments, and tested for fit. This project allowed us to test the developing rapid prototyping and mass customization paradigms and look for the bugs that are inherent in new technologies. While the process was ultimately successful, several areas were uncovered where the implementation of these processes might be problematic for industry.

1 INTRODUCTION

During the past decade, the textile and apparel complex has been scrambling to adjust to a rapidly changing business environment. With increasing imports and rising labor rates, the industry has seen a drastic change in its appearance. Businesses have closed and employment within the industry has decreased, as production of textile products moved to other countries. Industry leaders have been forced to evaluate this business shift and the ultimate effect on the consumer to determine ways in which the industry might maintain, if not regain, market share. These evaluations have led to the development of quick response, rapid prototyping, and mass customization strategies.

Quick response (QR) strategies were developed during the 80s, with the expected benefits to the industry of reduced overhead, handling costs, product inventories, financial investments, and markdowns [1,2,3]. Theoretically, the adoption of these strategies would allow businesses to respond to consumer demand more quickly than mass production strategies, because product decisions and commitments would be made closer to product entry in the marketplace—weeks rather than months before introduction. In order to implement QR strategies most effectively, a significant amount of trust and communication between members of the supply chain was imperative. The Demand Activated Manufacturing Architecture (DAMA) project was created in 1993 to help the Integrated Textile Complex (ITC) manage supply chain partnerships that would support quick response strategies (DAMA, 2000) [4].

Unfortunately, the industry as a whole has had difficulty implementing these strategies, for a number of reasons. First, the development time required for a new textile product was especially lengthy. New print designs took weeks or months to produce the first strike off for sample fabrics. The design and development process was not only lengthy, it was also extremely costly—costing almost $30,000 to set up each design, whether the design was actually put into production or not [5]. Second, businesses in the ITC were not normally powerful enough to be able to trust that their industry partners would

"come through" for them if their order quantities were small and placed closer to delivery times. Finally, technologies supporting the ITC did not allow integration of activities or encourage communication between channel members. The 7 years that the DAMA project was in effect were spent developing and enabling communication streams and educating the entire ITC about potential benefits of quick response strategies.

A 1997 DAMA survey of mid-sized apparel manufacturers uncovered a number of issues that were believed to impact a firm's ability to participate in quick response strategies. Among the issues were two that have significance to this paper. The first was the need for technologies that would help reduce the number or order of the product development processes and the time involved [6]. Manufacturers felt that the processes were so arduous and prolonged that it was extremely difficult to meet their customers' needs in a timely manner. Because of expense and long lead times, they were often forced to make product development decisions based on some other company's perceptions of their customer's wants and needs, rather than their own. This often contributed to less than unique offerings and a significant amount of unsold stock. Technological advancements were perceived to be a strong way to affect important changes. The second important issue was the need for better communication and integration between product development systems. The fact that there were many successful CAD/CAM systems used by many members of the ITC made the product development process even more difficult to successfully complete. It had become essential that companies be able to communicate explicitly, regardless of the specific hardware or system that each company used.

Information technology and automation are a vital part of rapid prototyping because they constitute the connection between the consumer's wants and needs and the ability of a manufacturer to create the products accordingly, and in a timely manner [7]. Taking advantage of technological developments in combination with proximity to the target market is the differential advantage that domestically manufactured products will have over foreign produced goods. However, while technology may enable these efforts, the processes involved are far from automatic. A significant amount of "behind the scenes" effort is still required in order to provide the color selection and fit of each garment that might be requested for sampling or individual customers.

2 DEVELOPING TECHNOLOGIES

When evaluating consumers' dissatisfactions with apparel that has been mass-produced and is readily available in the marketplace, there are several recurring themes. The first is an overwhelming criticism about how garments "fit". While fit is a subjective variable, at best, it is nevertheless a problem that almost every consumer has had at some time. In the apparel industry, accurate measurements are very important as the first step to determine correct sizing and to create garments customized to a specific target market. Historically, tailors and fashion designers used measuring tapes to obtain the physical measurements of the bodies they created for. This method has been time consuming, invasive, and often inaccurate, based on who took the measurements and how they took them. Until just recently, only tailors and couture houses actually still used real body measurements to create or alter the clothing they produced. Mass production strategies of the past 50 years encouraged the move from garments made to fit to garments made to size. Unfortunately, the sizing systems that have developed through the years are neither standardized nor related to the average human's body measurements While we know that garment sizing can be impacted by production inaccuracies, we must face the fact that many garments were sized or proportioned incorrectly for the target consumer, from conception [8,9]. This specific problem has encouraged the development of 3-D body scanning technologies that will enable rapid and accurate extraction of individual consumer's measurements. This ability will enable redevelopment of current sizing systems, as well as production of made-to-measure garments.

Another recurring criticism about garments that are currently available is that they are "ugly". This can be translated to mean that the clothing is not as long or short, wide or skinny, tight or loose, etc. as the consumer would like it to be. While this may sound like a fit issue, it is really more of a design manipulation issue and is one that designers/apparel manufacturers labor with each season. The need to respond more quickly to customer's wants has encouraged the continuing development of Apparel CAD software and systems.

J T A T M

A final complaint by many consumers is that they don't like the color, print, or fabrication of the garments available in the marketplace. The likelihood of finding a garment in the right color, and the right fiber, and the right fabrication is relatively slim considering the current mass production processes. Development of digital printing technology has occurred to respond to the desires of the market place and enable short production runs. The efficient integration of these technologies will allow manufacturers to customize their product offerings to better meet the needs of their consumers.

2.1 Body Scanning

The development of 3 dimensional body-scanning technologies may have significant potential for use in the apparel industry, for a number of reasons. First, this technology has the potential of obtaining an unlimited number of linear and non-linear measurements of human bodies (in addition to other objects) in a matter of seconds. Because an image of the body is captured during the scanning process, the location and description of the measurements can be altered as needed in mere seconds, as well. Second, the measurements obtained using this technology have the potential of being more precise and reproducible than measurements obtained through the physical measurement process. Third, with the availability of an infinite number of linear and non-linear measurements the possibility exists for garments to be created to mold to the 3 dimensional shapes of unique human bodies. Finally, the scanning technology allows measurements to be obtained in a digital format that could integrate automatically into apparel CAD systems without the human intervention that takes additional time and can introduce error.

Researchers have developed 3-dimensional body scanners that can capture the outside surface of the human body by using optical techniques, in combination with light sensitive devices, without physical contact with the body. Body scanning systems consist of one or more light sources, one or more vision devices, software, a computer system, and monitor screen in order to visualize the data capture process. The two basic types of body scanning systems are laser and light.

One method uses a laser scanning triangulation process to acquire the 3D image [10,11,12,13]. Cyberware in Monterey, California built one such system. This system uses 8 laser diodes, an arrangement of mirrors, and cameras within four scanning heads to record the laser images that are distorted by the body's shape. The data from the four heads are combined to create a complete image of the scanned body. The entire process takes approximately 17 seconds and creates an object with around 400,000 x, y, z coordinates.

In 1998, the Civilian American and European Surface Anthropometry Resource program (CAESAR) at Wright-Patterson Air Force Base initiated the largest scale anthropometric survey performed in over 30 years. It is the first international survey of its kind to utilize body-scanning technology. The Cyberware WB4 whole body scanner was used in this study [14,15]. The collected data will be used by multiple industries, including the military, automotive, and apparel).

Cyberware

Another technology uses white light phase measurement (PMP) [12,16,17]. Textile Clothing Technology Corporation ([TC]^2) in Cary, North Carolina developed the Body Measurement System (BMS) using the PMP approach because of the short acquisition time, high accuracy, and relatively low cost. One of their systems uses the data collected from six cameras (48 images in all) to create a 3D point cloud of the body scanned. The initial raw data consists of approximately 250,000 points, which are many more than the extraction software needs to obtain accurate body measurements. Consequently, the raw scan data must be further processed to filter stray points, segment the body into individual parts (trunk, arms, legs), smooth the low level "noise" from the scan, fill small gaps, and compress the data into a less dense data set. The extraction software allows more than 124 pre-defined measurements to be obtained, as well as the creation of new measurement definitions by the user.

J T A T M

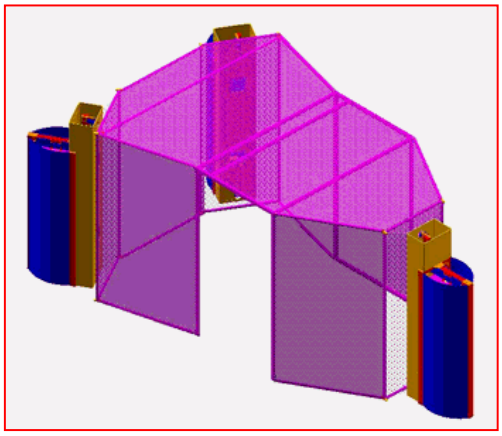

TC2 Whole Body Scanner

Wicks and Wilson has developed scanning technology that allows the creation of a 3-D color picture of the object being scanned [12,18]. The premise behind this technology is that more accurate measurements might be obtained if the researcher could "see" actual points on the body. This is related to the fact that all of the scanning systems have problems identifying key measurement points (i.e. acromium, knee, wrist bones, etc.) on a human body when faced with 250,000 or more points in a point cloud.

Wicks & Wilson

Many of these systems (such as, Cyberware, Telmat, Tecmath, and $(TC)^2$) claim the ability to integrate their data into some of the important apparel CAD systems (i.e. Gerber, Lectra, Assyst, PAD). Ideally, these systems should be able to work together much like Microsoft's Excel and Word software programs. At this point in time, however, no integration occurs automatically between commercially available scanning and apparel CAD systems.

Tecmath

2.2 Apparel CAD

Adoption of CAD/CAM technology over the past few decades has increased the speed and accuracy of developing new products, reducing the manpower required to complete the development process. Unfortunately, this technology has also encouraged manufacturers to simplify the design of garments, allowing a more efficient use of materials and making mass production much easier [19]. These systems initially only made an effort to adapt traditional manual methods instead of encouraging innovation in design or fit adaptations. Current developments in the area of information technology help build on the traditional CAD/CAM functions and offer a new way of looking at and using the systems for design and product development [20].

2.2.1 Assyst Bullmer

Assyst Bullmer has an array of products that have been developed to support rapid product creation. Cad.assyst is an apparel pattern development and modification software. Strengths of this software include ease of use and increased productivity. All of the most important and routine tasks require minimum steps and mouse clicks. Many pattern pieces can be worked on simultaneously, without restrictions. A new feature in this module is pattern dependency that allows any changes made on a source pattern to also occur on the patterns created from it. Macros can be easily created for repetitive tasks, such as the addition of seam allowances, the creation of facings, and the placement of buttons and buttonholes. Piece and grading information can be imported from

J T A T M

Gerber, Lectra, PAD, and anything else that can export using the AAMA .dxf file format.

Smart Pattern is a new product scheduled to be released in October, which is a modification tool rather than a construction tool. The basis of this software is to automate work done repeatedly by creating macros that are organized by type of activity. Compound macros can also be created to work together. The system will come with 500 pre-defined modules that can be used to easily create a background macro. After training, the user will be able to create their own modules for activities not initially covered.

Leonardo, a system due to be released in 2001, is a very new and unique way of managing made-to-measure or custom products. The system is made up of 3 parts that currently appear to be very involved and time consuming. Basically, the software is being developed to recreate a specific pattern (or solve a problem) based on the measurements that are defined each time. Currently, patterns being developed initially in this system require more time than in the cad.assyst system. The benefit to be derived will be a significant reduction in time and effort for repeated garments made from different combinations of body measurements. This software is a very unique departure from the complicated alteration processes employed by most of the competition's systems in their mass customization or Made-to-Measure strategies.

2.2.2 Gerber Technology

Gerber Technology's PDS 2000 allows the user to move multiple lines at once, in the same direction, or in reverse, as desired. The system can also remember where pieces were on the screen when they were saved so that they can return to that position when recalled. Multiple pieces can be selected at one time using the marquis function. Pieces can also come into the work area in a full-scale view. This allows patterns to be created or refined in less time, which in turn increases profitability.

APDS 3D is the software from Asahi that allows a virtual try-on of garments created in PDS 2000. This system comes with a variety of dress forms—men's, ladies', children's, Juniors, and with legs—all of which can be altered by the user, to some degree. An ease table is built into the system, which allows fabric drape to be demonstrated based on Kawabata values. Essentially, this software allows the user to drape 2D patterns on-screen and make pattern revisions, check new designs and graded patterns on a virtual drape model, and input fabric design to create a virtual sample.

Artworks Studio is a design, merchandising, style development, and illustration system that allows the user to easily create the artwork needed to design, manufacture, and illustrate a variety of products. This system provides the power to enhance and communicate ideas faster and more efficiently than ever before. Since it is a modular system, the user can customize a package that would best meet their needs.

Web PDM is a 3-tier system that is database independent. Customers can choose the database they want (Oracle, Sequel, Informax, etc.) based on what they may already use. It also allows interface with SAP, JBA, and other ERP systems. Database entry is easier with this system since the user is allowed to enter the information directly into the datatbase or in the form where the information will be applied. Datacolor and Gretag Macbeth systems can be used to submit color calibration information, providing more precise product specifications enabling more positive results in the product manufacturing process.

Web PDM has style files to provide information specific to one specific style. It also has Range Plans to coordinate styles within a season. There is an Accumark interface that is linked to automatically update information as Accumark pattern files change. The retailer interface is through the Made to Measure (MTM) software in the classic system. Internet access is allowed without software support on the system using password controls. This allows read only access for customers or other constituents for all distant locations.

Web PDM has a 3D costing module based on size, fit, and color. Wizards help set up the forms to meet the needs of the users, originally. Labor forms within the system, interface with

J T A T M

GSD. The Standard Costing Application (SCA) works within the forms created using the Wizard interface.

Made to Measure (MTM) allows options to be developed or determined for each garment in the system. These decisions are set-up in the model editor. Alteration rules are developed to coordinate actions to be done to each garment for which access is allowed through MTM. A batch process runs all MTM actions, generates marker orders, submits or process the marker order, makes the marker, and creates either a plot file or a cut file. These actions occur at the manufacture level through directions in MTM, possibly at the retail level.

2.2.3 Investronica

INVESTRONICA SISTEMAS has introduced a 3D system from an alliance with Toyobo called Dressing Sim FDK. This system acts as a virtual try-on of garments created through the Pattern Generation System (PGS). The user will import a body form, import a pattern created in PGS, and import pattern characteristics. After lining each garment piece up to the body, it can be evaluated from each side of the body. Once properly aligned, the garment will be virtually seamed together. Fabric variations can be applied to simulate fabric drape and relaxed to conform to the body. This system is still in developmental stages and requires some time to operate correctly in order to get the most correct virtual representation of the intended garment. Knowledge of flat pattern engineering, as well as draping, would be important for successful operation.

Another new product is the 3D-Design system, which will be released at the Milan show in March 2001. This system will come with 50 to 60 body shapes to cover a wide range of ages, sizes, and shapes of people. The user will also have the ability to change the measurements of the key dimensions, as desired. INVESTRONICA handles the issue of ease in their Body Garment 3D Design system by allowing the user to define the specific amount of ease desired in specific locations. Once the ease layer has been defined, the designer will be able to draw design lines on the 3 dimensional form. These lines will then be used to identify pattern shapes that will be flattened to 2D for export into their PGS system. The PGS system will continue to be used as the platform for the addition of seam allowances and other production features.

The INVESTRONICA Made to Measure (MTM) system works much the same as other systems on the market. All the pattern pieces have to be prepared for alteration and alteration tables created to guide the alteration process. These tables can then be applied to all garments in the database, if prepared adequately and appropriately in advance. This module enhances the process of receiving orders for garments from the point of sale. Web MTM is a tool developed for retailers to use to communicate customization of manufactured garment styles.

InvesPM is the specification package that links with the PGS system. This system organizes all the product information generated during the design cycle. Users define garment attributes, such as the season style, category, brand, line, base size, size offerings, etc. User variations are allowed in the Bill of Materials and information about specific materials can be added “on the fly” to the materials database from with the Bill of Materials page.

The WebPM is a product management and coordination system that brings together all of the information associated to a given product, coordinating the various departments and companies that participate in the development and production of a specific product. It can be linked to many management or enterprise resource-planning systems for import and export. A catalog of garment categories comes up for every authorized user that accesses the web site. This allows access to general data, measurement specs, piece lists, and marker descriptions,.

2.2.4 Lectra

LECTRA Systemes had a number of new products to debut at IMB 2000. Catalogue was introduced to make the sales/ordering process of customized goods more easily controlled and communicated. The retailer who offers a manufacturer’s products for sale would use the system. A database containing all of the available styles and fabrications can be managed by Catalogue, allowing the consumer to define fabrication for each garment component. FitNet will take the product defined in Catalogue and create a customer order for it. Customer information is entered in or pulled from a customer database, critical measurements may be entered in (from manual measurements) or

J T A T M

imported in from Tecmath 3-D body scanning software, and an order created and sent to the manufacturer over the Internet. Once this information is received at the manufacturer's site, a marker can automatically be made for that specific consumer.

Another system targeted to the Retailer was 3-D Visual Merchant (3DVM). This package can be placed on a stand-alone system or be managed using a server, allowing access to many merchandisers within a store. It will allow merchandisers to design their floor layouts, complete with virtual garments in this season's colors, before they ever pull the merchandise out of the box. There is a catalogue of 150 generic fixture, lighting, color, and apparel choices included with the system, but the user can also add, create, or define their own. This product will not only allow retailers to more easily communicate their merchandising wishes to all their branch stores, it will also enable retailers to keep their storefronts fresh and new for the consumer in a more creative and/or pleasing way.

A new version of Graphic Spec was demonstrated at IMB 2000. This software strengthens the creation of technical drawings that support specification packages created for products going to production. The files created in this package can be imported into Gallery, LECTRA's new specification software package. Design details, including silhouette, fabrication, and color choices are included, as well as size specifications, sewing instructions (or construction details), bill of materials, bill of labor, costing, pattern thumbnails, marker layouts, attachments (cut files, video files, faxes, etc.) and work in progress. The pattern and marker files are linked to Modaris and Diamino so that any future changes in either file will automatically occur in the Gallery file, as well.

The Gallery software allows many users to be working in the file at one time, as long as they each are working in a different section of the package. The work in progress section keeps track of every change that occurs and identifies the person who made the change. Technical reports can be custom created by the user, if the 50 included with the package are not enough.

Yet another new Lectra product to debut at IMB was Virtual Garment. Using special glasses, the user is able to see how a garment might fit and drape on the wearer. It also allows modification of the fabric design and color, so that a more pleasing garment might be developed.

Modaris and Diamino, LECTRA's pattern design and marker making software, also had some new capabilities. Modaris now has Macro capability, which allows the system to memorize certain tasks that are done over and over again. The macros let the user be involved with certain parts of each process (such as determining the amount of seam allowance to add), without having to repeatedly select an assortment of tools. Diamino has expanded marker-making capabilities, with a new "shake" utility that tweaks an automatically created marker to improve efficiency.

2.2.5 PAD System Technologies

PAD SYSTEM TECHNOLOGIES introduced their PAD System 4.0 software that should be available in the fall. Users will see a new "cloning" tool that allows any changes made to a master piece to also occur in the pieces cloned from that master. For example, any blouse, dress, or jacket that was cloned from one master block will automatically receive the changes made to the master block.

Within the pattern design system, each piece can be colored according to its use, as determined by the user. All pieces to be made from the fashion fabric could be blue, from the lining might be yellow, and from interlining might be gray. And since each of these might be cloned from the original, any changes to the neckline edge of the main "blue" piece, will also occur at the corresponding point on the "yellow" lining piece and the "gray" interlining piece. Frames have been updated to also affect changes on cloned pieces.

Another new functionality includes the ability to work on pieces, while they are in grade view. The user can now see the effects of any changes in all sizes, at the same time. Technical drawings are viewable at every stage of pattern development and grading, as well. In addition, plan, piece, and grade windows are all available.

3D Sample software allows a 2 dimensional set of patterns to be placed on a 3D form that is the correct size for a virtual try-on of the virtually sewn garment. The user can also create a technical drawing of the garment, export it to Adobe Illustrator and/or a pattern file. If the

J T A T M

garment is too small to fit correctly, body parts will show through.

PAD SYSTEMS Manager allows the user to create specification packages for products created with PAD SYSTEMS Pattern. Technical drawings can be created in Adobe Illustrator, in addition to other similar drawing packages and imported into Manager.

2.2.6 CAD Alterations of Developed Patterns

Almost every CAD system used in apparel pattern making has some method that enables pattern alterations based on individual measurements. Although each has created an interface somewhat different from all of the others, most (Gerber Technologies, Lectra Systems, Investronica, & Assyst) have three preparational activities in common that will allow "automatic" alterations to occur. Two other systems (PAD and Scanvec) have attempted to enable automatic alterations in a slightly different manner; however, the basic underlying theory is the same. These preparational activities are laborious in the beginning, but ultimately allow the automatic alteration of existing garment patterns. This set of activities requires a strong knowledge of garment design, grading, and garment construction, as well as an understanding of how computer programs "think".

The fact that this process continues to be cumbersome and time consuming at best, will impact the creativity involved in garments designed for mass customization. While developers have been working to integrate the measurements extracted from 3-dimensional body scanners [16], the process is still far from automatic and often provides less than desirable results.

2.3 Digital Printing

Initial developments in ink-jet technology were directed at improving the decision-making process and the cost of sampling involved in the textile mass production operation [21]. Since that time, key players in the textile and apparel industry have begun to think outside the box and imagine ways in which this technology might be used to meet consumer needs, not just manufacturing needs [7]. Continued improvements in the areas of ink-drop formation, pigmented or dye-based ink formulations, color control, pre- and post-treatment methods, and fabric handling systems will be important if mass customization strategies are to be implemented and allowed to succeed at the highest level.

Ink-jet technologies are of two basic types: drop-on-demand and continuous [21,22]. The drop-on-demand method produces ink droplets only when and where required. The drops can be produced using thermal "bubbles" or the mechanical shocks created with piezoelectric technology. Encad printers use thermal technology and Mimaki printers use piezoelectric technology. Both of these technologies are significantly slower, yet more affordable, than continuous ink jet. Challenges for drop-on-demand technology continue to be related to increasing the production speed of the image, increasing the number of colors that can be produced, and solving problems with print head deterioration.

Encad--Thermal

Stork Amber--Piezo

The continuous ink-jet method involves the use of a highly pressured, continuous stream of ink, which has been forced through a microscopic nozzle. Tiny drops are created from this stream by high frequency stimulation and directed to the desired location by a variable electric charge [21,22]. This technology allows relatively high-speed production of digitally printed fabric. Challenges still to be overcome include reducing

J T A T M

the high cost of the technology, management of recirculated inks, and the need for extremely purified and expensive dyes. Stork's Amethyst printer is an example of this technology.

Stork Amethyst--Continuous

At this point in time, most of the companies that supply ink-jet printers are only willing to warrant the quality of the image created using their printers if you use their pre-treated fabrics, their inks, and their post-treatment (usually steaming) equipment and methods. This requirement places extreme limitations on the product development process, as a whole, and also makes it cost prohibitive, in many cases. The future success of digital printing technology will be based on the cooperative efforts of hardware developers, software developers, pigment and dye-based ink developers, and textile manufacturers and finishers.

3 PILOT STUDY

During a summer research program held at the university over two summers, seven separate customization studies were done. Each study lasted for a period of 4 days, 4 hours a day, and included five high school aged subjects (17 to 18 years of age). Most of the subjects had expressed an interest in apparel management, which was why they were included in our study. None of the subjects had any apparel design or production background or experience. Two to three subjects had an artistic background and were fairly proficient using graphical design programs on the computer.

The goal for each week was to enable each subject to create and physically produce a garment that would fit their specific body and that was made from their choice of fabric/design, within limitations. The number of garment designs they could choose between, the fabric selection, and the computer software available for use limited the subjects.

3.1 Preparation

Mass customization is based on the idea of customizing previously designed products. By definition, this places limitations on the design process and the ultimate consumer. Rapid Prototyping, on the other hand, is the ability to conceive a design idea and see a physical creation of that idea in a very short period of time. This physical prototype needs to be created out of the materials that would be used when retailing the product. Ideally, this ability to actually see a physical representation of a product idea in a very short period of time, would reduce the overall development time and allow better decisions to be made more quickly. To more accurately imitate the mass customization paradigm and to make rapid prototyping a realistic possibility with untrained "designers", a small "line" was designed and tested out with sample garments.

3.1.1 Apparel Design

3.1.1.1 Product Development

The participants selected to be part of this project were males and females, 17 to 18 years of age. Because of this, our initial product development activities centered on determining apparel styles that would appeal to this market. We used traditional information gathering techniques to determine the kinds of garments that might be the most desirable. The development process was impacted by two limitations. The first was the fact that our subjects had little or no apparel production experience and they were to actually produce the garments. The second limitation was the fact that there were only four days in which to complete the project.

Six total garments were designed using Gerber's Pattern Design System (PDS); three for females (Garments A, B, & C) and three for males (Garments D, E, & F). Garment A was an above knee-length fitted shift with waistline fitting darts, bust darts, and a square neckline. Garment B was a straight sleeveless shift, above knee-length, with a v-neckline. Garment C was a plain pair of drawstring shorts. Garment D was a basic tank type shirt. Garment E was a pair of drawstring shorts and Garment F was a pair of drawstring pants. Sample garments were made

J T A T M

and displayed for the subjects to see and try on, if desired.

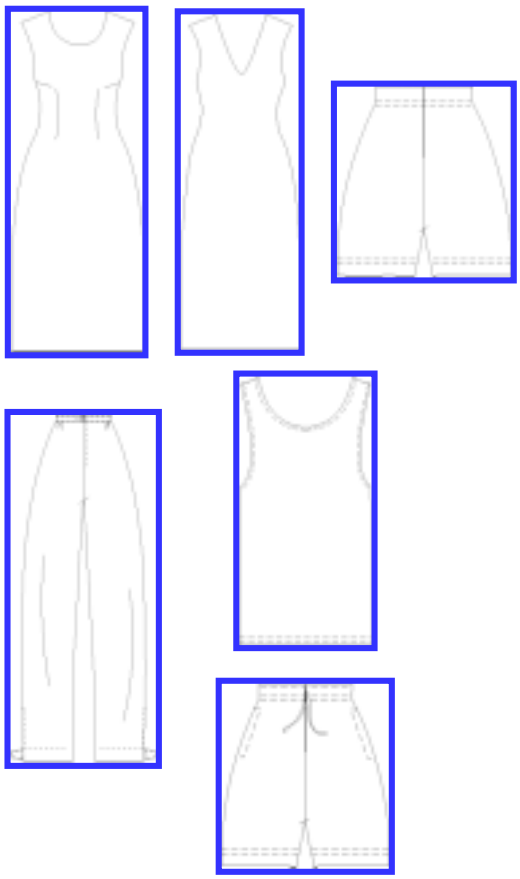

3.1.1.2 Grading

As mentioned previously, most of the apparel CAD programs enable previously created garments to be altered, based on the sizing grades that have been applied to the garments. Grade rule tables were created in Gerber's Accumark system. Based on our expected target customers, we chose to grade Garments A-C in Missy sizes 2-14. Garments E & F were graded in Men's sizes 28 through 42 and Garment D was graded as Men's S, M, L, XL.

3.1.1.3 Alteration Rules

An alteration rule table was created within the Gerber Accumark system for each of the garments in our line. This table was created according to how the structural lines of the garment should move based on the difference between actual body measurements of the subject and the physical measurement upon which the sizing grade was based at key locations. Key measurement locations for the fitted shift included the bust, waist, hip, back waist length, and waist height. Alteration rules were created much like grade rules in that the grading movement was significant to the orientation of the pattern piece on the computer screen.

3.1.1.4 Prototype Test

Once each of the garments in the line were graded and prepared for alteration, the accuracy of the alteration decisions was tested out. To do this, we three dimensionally scanned the body of a test subject, extracted the key measurements needed for each garment, and physically inserted those measurements within the Size Code tables in the Gerber Accumark System. A customized marker was ordered and made for each garment using the Grade Rule, Alteration, and Size Code tables developed. These garments were then fit tested on our test subject.

3.1.2 Textile Design

3.1.2.1 Motif library

A textile designer worked to develop a library of motifs that could be used by our subject "consumers" to create their own designs. Motifs were selected that might appeal to a wide variety of people. They were organized by subject and were created in a variety of colorways.

3.1.2.2 Textile Design Layout

The designer also created a number of design layouts using the motifs and colorways previously created. Examples of border prints, overall prints, and complementary prints were created so that the subject "consumers" could be led or "helped" when making their textile design decisions for their own garments.

3.1.2.3 Samples printed

Samples of most of the designs were printed using the Encad TX1500 Digital Printer and reactive inks. The samples were steamed, washed, and dried so that our "consumers" could see the end result of the process. This was also important, because the appearance of the design on the computer screen had a significantly different color appearance than the final digitally printed fabric.

3.1.3 Fabric Pretreatment

The feasibility of using digitally printed fabrics in mass customization efforts will be based, in part, on the availability of affordable, pre-treated fabrics. Because of this we were encouraged to develop and test our own pretreatment method for the selected fabrics, rather than purchasing the pretreated fabrics from the printer or ink vendors.

3.1.3.1 Treatment selection

A treatment formula was developed based on screen-printing experience and trial and error. A mixture of urea, sodium bicarbonate, and sodium alginate was created to pad the fabrics selected for use. This formula was considered appropriate because it was similar to the one suggested by Encad and was being prepared for cotton fabrics and reactive inks. Our goal was to pretreat the fabric so that image quality would be high (little diffusion or bleeding of the inks), the image would be colorfast, and there would be no need for a stabilizing, paper backing for the fabric.

3.1.3.2 Fabric Padding

A100% cotton twill and a 100% cotton knit were chosen for use in this project. Approximately 35 yards of the twill and 10 yards of the knit were padded using the Xorella autoclave/steamer the pilot lab at the university. The speed and pressure of the machine were set to allow about 70% wet pickup. The fabric was draped and allowed to dry naturally. We did not run the fabrics through the tenter frame because of the relatively small lengths being padded and the expense related to that effort.

3.1.3.3 Printing Preparation

Once the fabrics had been padded and dried, they were cut down to 59" widths so that they would work in the Encad printer. Ten yard lengths of the fabrics were then rolled to prepare for printing.

3.2 Subjects

There were five subjects in each of the seven one-week research sessions. The first, third, fifth, and last week each had one male; all of the others were female. All of the subjects were in the senior (final) year of high school and were involved in the summer research program as part of their search for a college and a major area of study.

3.3 Procedures

On the first day of each session the students were: a) introduced to the goals of the project and the idea of mass customization, b) safety trained in the apparel design lab, c) physically measured, d) three dimensionally body scanned using the $(TC)^2$ BMS system, and e) introduced to the apparel design and textile design decisions that would need to be made the next day. The second day of the project was spent selecting the garment design, making minor adjustments to

get the look the student desired (changing necklines and lengths, adding slits and pockets, etc.), developing the size code tables based on their scanned measurements, and creating the desired textile design. A CAD specialist in apparel design or textile design assisted the students in each of these steps, although they were allowed and encouraged to do their own work, if they felt capable or inclined.

The students spent the third day of the session printing their fabric designs and steaming, washing, drying, and preparing the fabric for cutting.

On the fourth day, each student's customized garment marker was cut from his or her fabric, using the Gerber Cutting Edge Cutter. The rest of the day was spent constructing their garments and preparing a presentation to be made to the other research groups.

3.4 Outcome

At the end of each session, every student had produced a garment. Regardless of anything else, the fact that the students survived the intensive product development process and learned some rudimentary sewing skills qualified the project as a success. In our view, however, the sessions had varying levels of success.

Session one was plagued with a variety of logistics problems that were difficult to overcome. The digital printer developed ink delivery problems (air in the lines and clogged heads) that required a significant amount of time to correct and yards of fabric re-prints before each student's fabric was successfully printed. The Xorella steamer had to be engineered to handle the larger quantity of digitally printed fabric, which was also time consuming. These two situations caused a reduction in the time initially planned for garment cutting and production. It wasn't until the garments were being sewn together that we discovered an error in the Alteration Rules that were developed before the sessions began. This error had not been apparent during the testing phase because our test model did not have a **significant** fit problem. At that point it was too late to fix the problem. We were able to adapt the design of the garments that had a problem, however, so that each would be wearable.

Session two had a group of students with a wider variety of fit problems. Our initial Missy Grade Rule had to be adjusted to accommodate more of the larger sizes, and was revised to include up to a size 22. We had none of the printing or steaming problems that we had experienced the week before and found ourselves with enough time on our hands to have the students pad out

J T A T M

some more fabric to be used in the next session. (This was necessary because of the excess fabric used during the printer problems in the first session.) Students successfully completed their garments. Some of the were disappointed, however, in the final length of their garment. This was not a problem that occurred because of errors in the Alteration Rules, but rather because the students were unaware of how the garment fit the fit model who was used for measurement comparisons.

Sessions three and six were the most successful sessions. We had repaired the problems with the Alteration Rules and the digital printer that we'd had the previous sessions. We did have a problem, however, with the quality of the digitally printed image and the colorfastness of that image. We ultimately determined that this problem occurred because we had used fabric padded some time before, which may not have been stable. The outcome was that blacks became brown and rich burgundies became pink. While the garments were still beautiful by most observers' standards, they weren't what the students had in mind when they developed their textile designs.

4 CONCLUSIONS

We learned two significant things from this pilot project. The first was that there is a possibility for successful use of mass customization strategies that may benefit the textile and apparel industry. The second, and possibly most important thing we learned was that there is a great deal of work yet to be done to enable that to happen. There are some significant issues with current technology that must be addressed before these technologies will actually be attractive to industry.

Each of these technologies, alone, is amazing and powerful and provides benefits to the industry, in some way. For mass customization strategies to be profitable and successful, however, these technologies must all work together, seamlessly. Critical developments must occur in the areas of: a) integration between 3D body scanned measurements and apparel CAD systems; b) software that will allow automatic alteration of patterns according to scanned measurements; c) software that will allow the integration between apparel CAD systems (vector programs) and textile CAD systems (raster programs) so that the textile design can be more creatively applied to the apparel design; d) inks that might reduce the pre- and post-treatment requirements of the fabrics; and e) hardware that will allow faster printing, higher quality printing, and better control of the fabric. Ultimately, success will depend on the ability of many people to work towards a common goal, in complementary and cooperative ways.

ACKNOWLEDGEMENTS

The author would like to thank the National Textile Center for their support of this research, as well as graduate students Karla Simmons, Lashawnda McKinnon, and Lisa Parrillo-Chapman.

REFERENCES

[1] Bianchi, A. "Quick-response apparel." *Inc. Magazine*, 15(11), 35.

[2] Dickerson, K. *Textiles and Apparel in the International Economy*, 186, MacMillan, 1991.

[3] Glock, R & Kunz, G. *Apparel Manufacturing Sewn Product Analysis, 2nd Edition*, 22-23, Prentice-Hall, 1995.

[4] DAMA. *1996 DAMA Annual Report.* DAMA-G-29-96, May, 1996.

[5] Tortora, P. "Textile printing and design." *Understanding Textiles*, 426-453, NY: Macmillan Publishing ,1992.

[6] Wimple, C. & Vosti, E. "Current Information Technology Needs of Small to Medium Sized Apparel Manufacturers and Contractors." *DAMA Enterprise Modeling and Simulation*, UCRL-ID-129187, DAMA-G-2-98, November, 1997. Available online at http://tc2.sandia.gov/needs.html.

[7] Little, T. "It's a CAD, CAD World." *WSA*, 13-15, Winter 1997.

[8] Anderson, L.J., Brannon, E.L, Ulrich, A.B., Jenkins, A.B., Early, J., Grasso, M., & Gray, S. "Understanding Fitting Preferences of Female consumers: Development of an Expert system to Enhance Accurate Sizing Selection." Available online at http//: www.humsci.auburn.edu/ca/html/andentc1.html, July 20, 1999.

[9] Kaufmann, K. "Invasion of the Body Scanners." *Circuits & Devices*, 12-17, May, 1997.

[10] Paquette, S. "3D Scanning in Apparel Design and Human Engineering." *IEEE Computer Graphics and Applications*, 11-14, September 1996.

[11] Daanen, H., Taylor, S. E., Brunsman, M. A., & Nurre, J. H. "Absolute Accuracy of the Cyberware WB4 Whole Body Scanner." *SPIE*, Vol. 3023, 6-12, 1997.

[12] Bruner, D. "Application Of Body Scanning Technology." *Bobbin Show Seminar*, Atlanta, GA, October 1, 1999.

[13] Addleman, S. "Whole-Body 3D Scanner and Scan Data Report." *SPIE*, Vol. 3023, 2-5, 1997.

[14] Potts, L. A. "Government business join to measure the human race." *Detroit News*, July 30, 1997.

[15] CAESAR. Available: http://www.sae.org/technicalcommittees/caelaser.htm, December 10,1999.

[16] $[TC]^2$. "An Introduction to the Body Measurement System for Mass Customized Clothing." Available online at http://www.tc2.com/RD/RDBody.htm, May 3, 1999.

[17] Demers, M., Hurley, J.D. & Wulpern, R.C. "Three Dimensional Surface Capture for Body Measurement using Projected Sinusoidal Patterns." *SPIE*, Vol. 3023, 13-25, 1997.

[18] Gray, S. Personal communication, at Nottingham Trent, UK, June 9, 1999.

[19] Bye, E. & LaBat K. "Technology: Shaping the Aesthetic Product". In Delong, M. & Fiore, A.M. (Eds.) *Aesthetics of Textiles and Clothing: Advancing Multi-Disciplinary Perspectives*, 28-38, 1994.

[20] Bye, E. "The Influence of Technology on the Apparel Product." *Proceedings of the World Congress on Textiles in the Millennium*, 249-255, July 6-7, 1999.

[21] Stefanini, J. "Ink-jet Technology for Textile Printing." *Melliand-Textilberichte, English*, Vol. 78 (1-2), E16-E18, January/February 1997.

[22] Fagerquist, R. "Jet, Wave, and Droplet Velocities for continuous fluid Jet." *Journal of Imaging Science and Technology*, Vol. 40 (5), 405-411, September/October 1996.

AUTHOR'S INFORMATION

Dr. Cynthia L. Istook
College of Textiles
P. O. Box 8301
Raleigh, North Carolina, USA 27695-8301
Telephone: (919) 515-6584
FAX: (919) 515-3733
Cynthia_Istook@ncsu.edu

J T A T M